1	OK TO USE PARTS MADE	2	NEW SHOP PRACTICE
3	PARTS NOT CHECKED	4	SCRAP EXISTING PARTS
5	PROGRESS CHANGE		NOTES

LETTER	EFFECTIVITY	CHANGE	REF	DATE	BY	CHK

80577
SHEET 22
REV

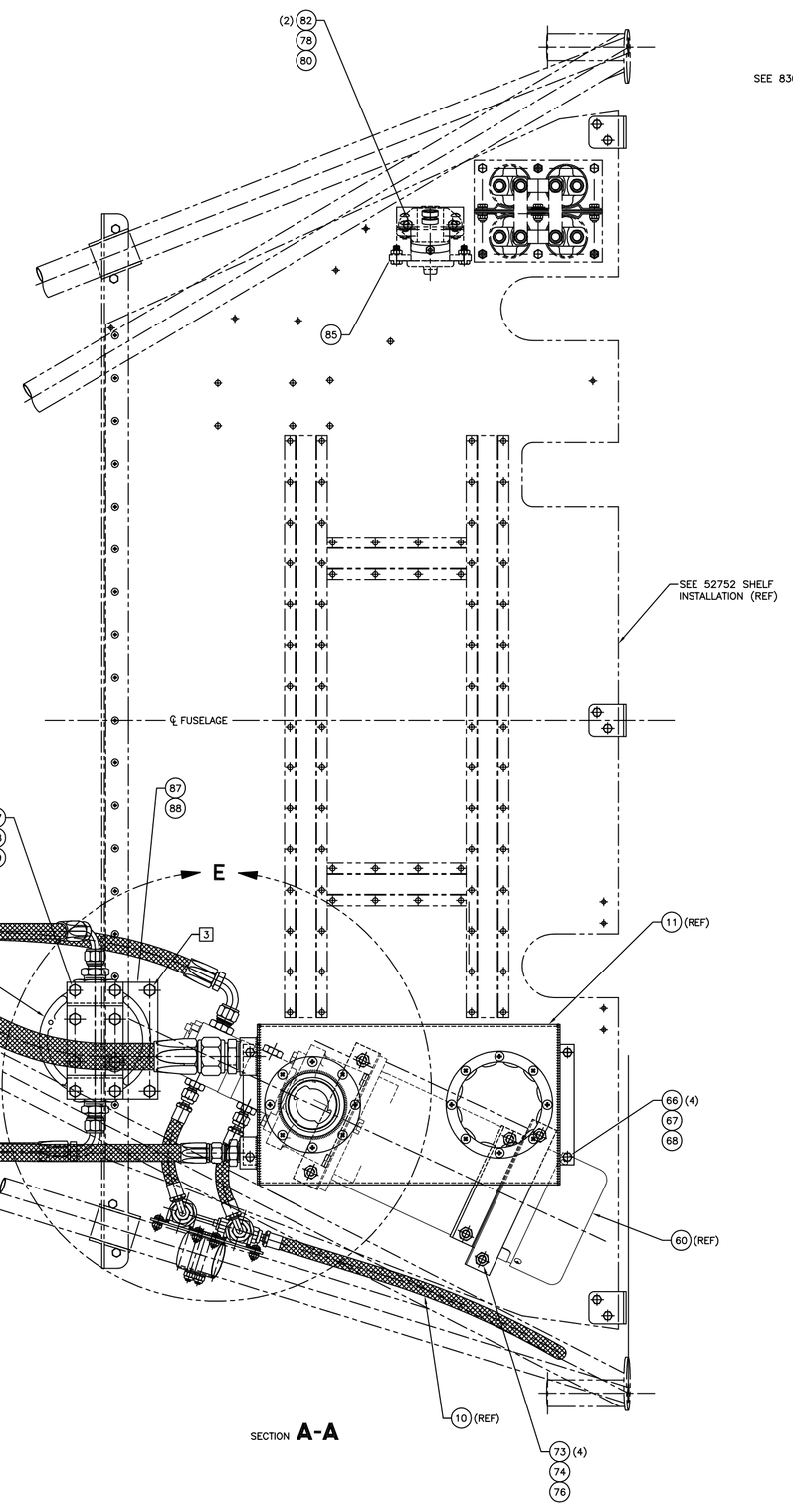

SECTION **A-A**

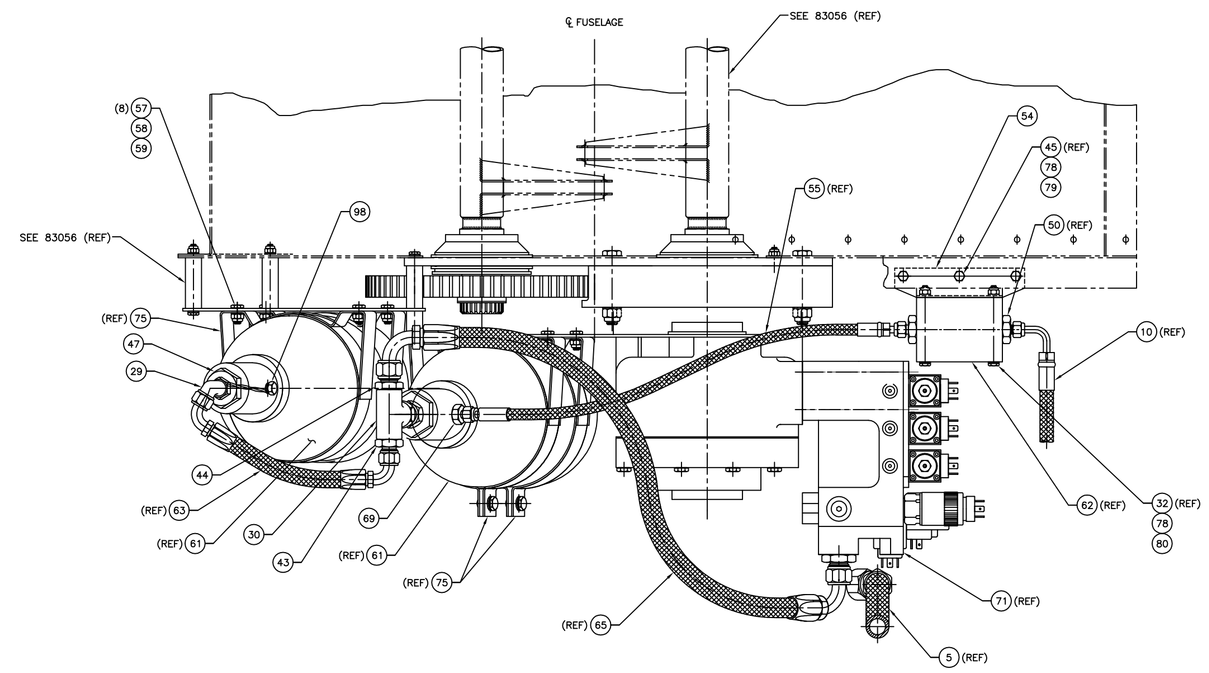

SECTION **B-B**

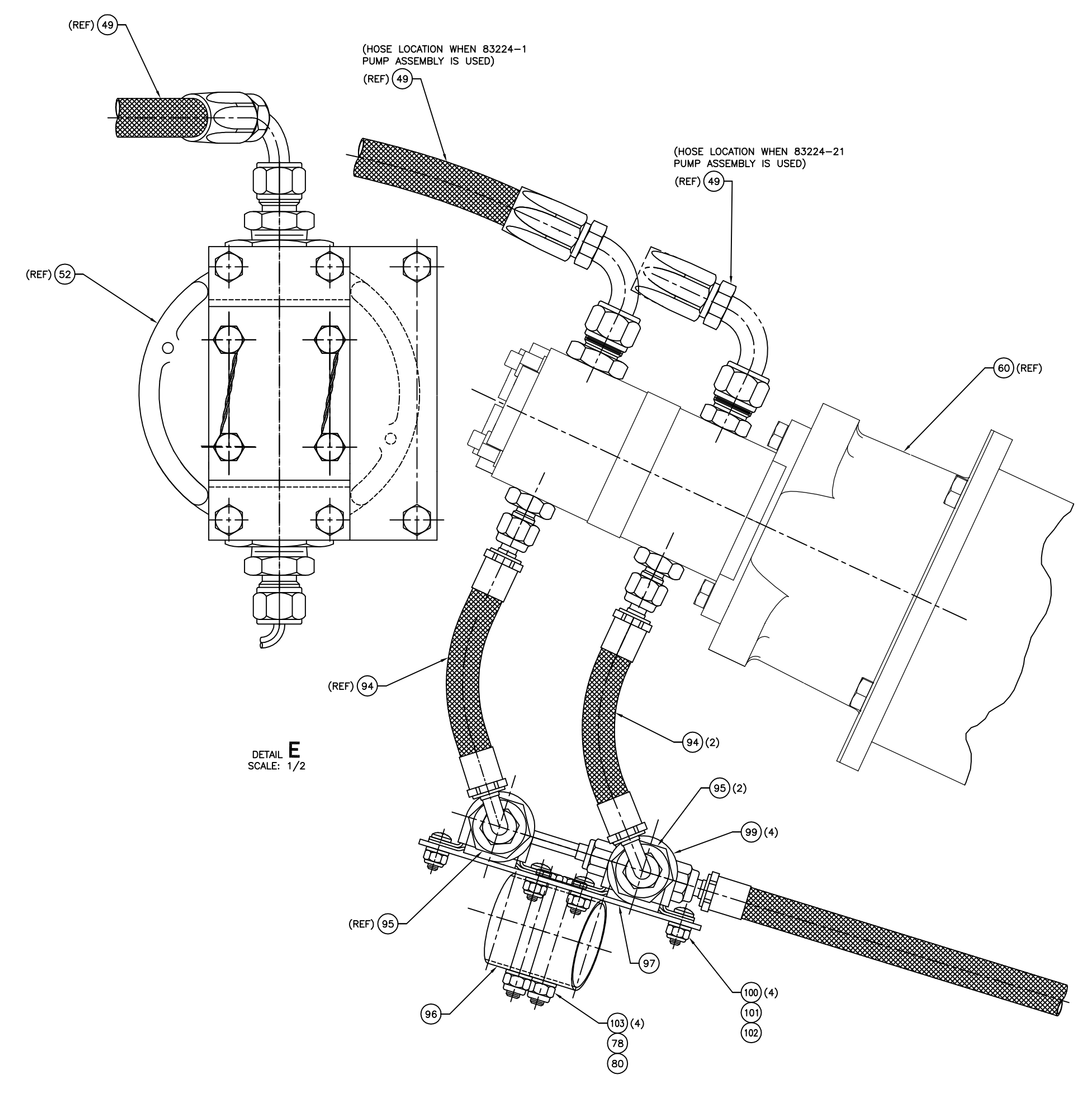

DETAIL **E**
SCALE: 1/2

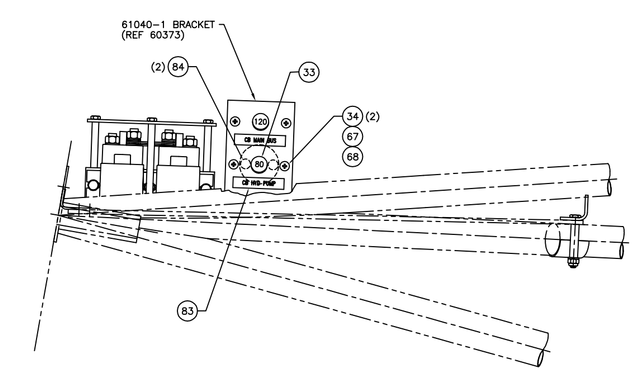

VIEW **C-C**

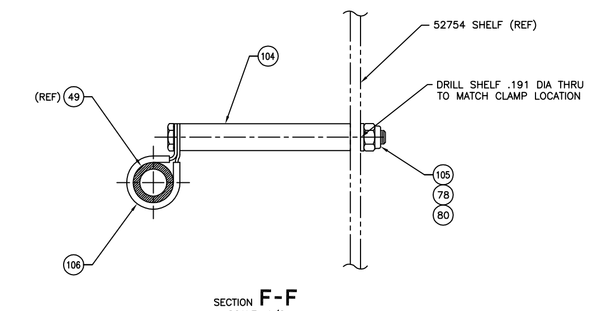

SECTION **F-F**
SCALE: 1/2

1					SEE SHEET 21						
ITEM	PART NUMBER	NO. REQ'D	PART NUMBER	NO. REQ'D	DESCRIPTION	SIZE	SPEC.	ZONE	NO. REQ'D	NEXT ASSEMBLY	MODEL
	OPTIONAL ASSEMBLY		SHOWN ASSEMBLY		MATERIAL						

REMOVE ALL BURRS AND SHARP CORNERS	DRAWN EKC	DATE 5-6-07	CHECKED LS	SNOW ENGINEERING CO. WICHITA FALLS, TEXAS	SCALE 1/5	REV
WELD	APPROVED	EFFECTIVITY 1002-0001			SIZE D	
FINISH NONE	INSTALL INSERTS PER P8110 EXCEPT AS NOTED INSTALL ALL FASTENERS PER P8110 EXCEPT AS NOTED			TITLE HYDRAULIC SYSTEM —INSTALLATION	DRAWING NUMBER 80577 SHEET 22	
HEAT TREAT						
ACC. WT. / CALC. WT.						