61587 SHT 2 REV

1 OK TO USE PARTS MADE	4 NOW SHOP PRACTICE
2 PARTS MAY BE REWORKED	5 SCRAP EXISTING PARTS
3 RECORD CHANGE	NOTED

LETTER	EFFECTIVITY	CHANGE	REF	DATE	BY	CHK
			☐			

☐ NOTE

1. PURCHASED FROM TROTTER CONTROLS AS P/N 5025–0026 (LCD).
2. FUNCTIONALLY EQUIVALENT TO 61587–1 PILOT INTERFACE (VFD).

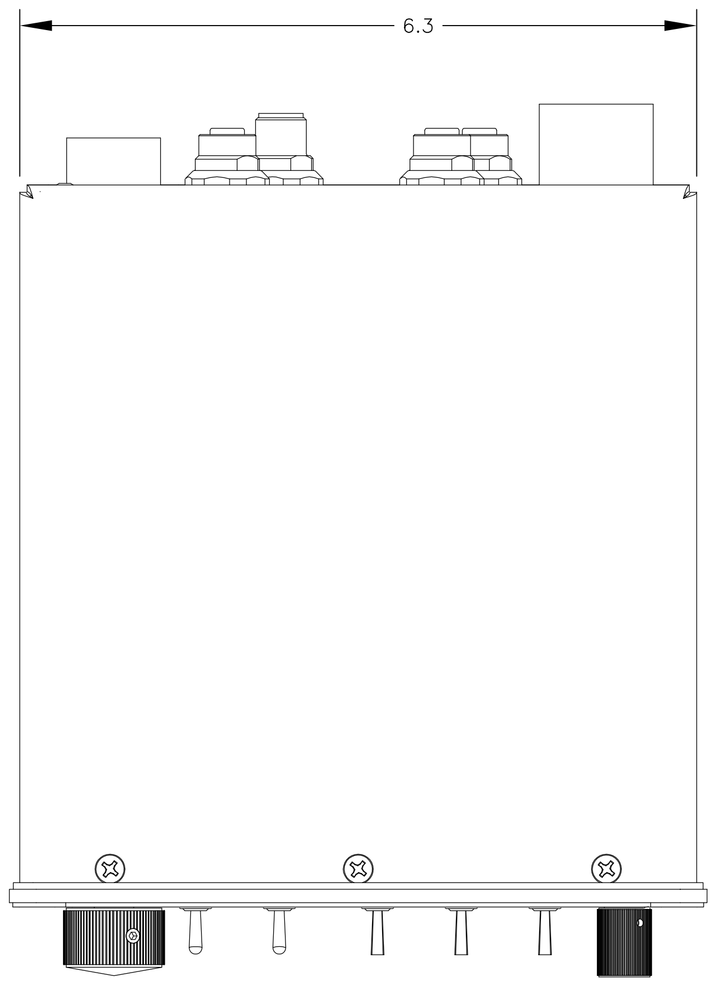

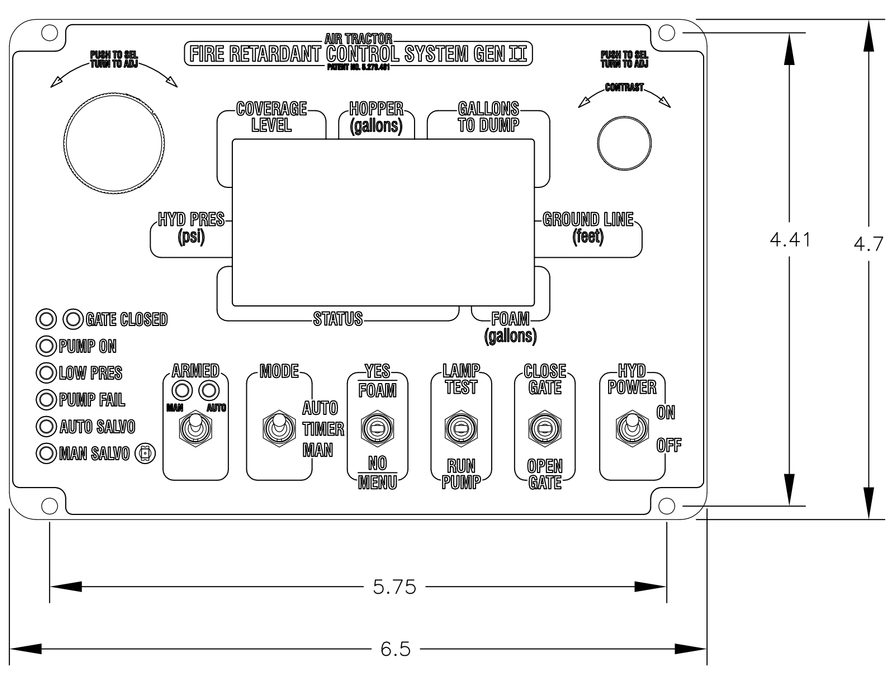

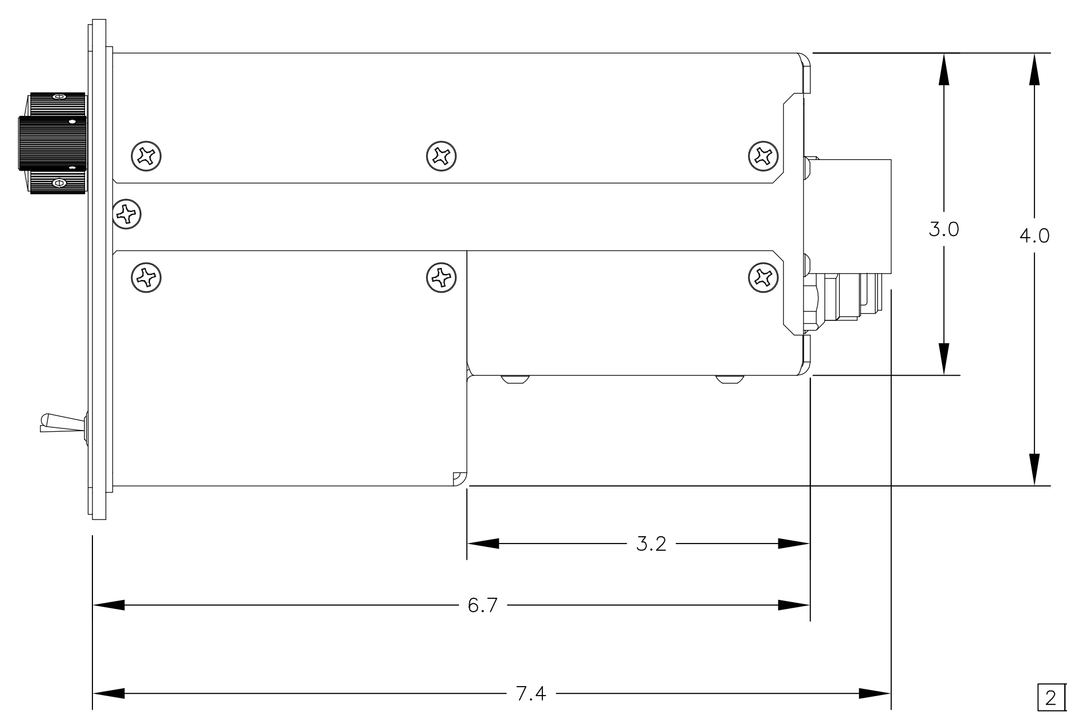

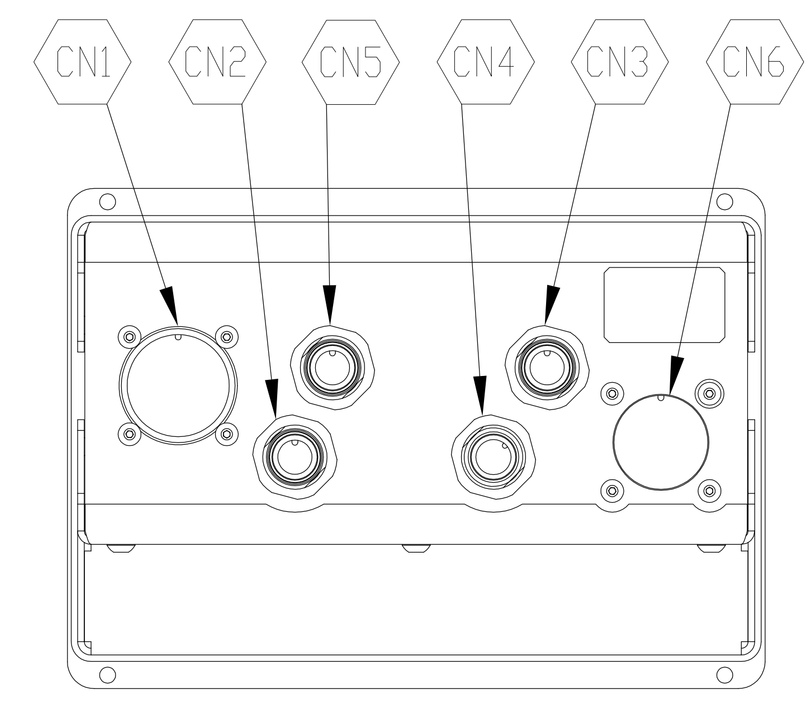

ITEM	PART NUMBER	NO. RQD.	PART NUMBER	NO. RQD.	DESCRIPTION	SIZE	SPEC.	ZONE	NO. RQD.	NEXT ASSEMBLY	MODEL
2	2		61587–2	1	ASSY, PILOT INTERFACE (LCD)				1	51625	802F
1	1		61587–1	–	SEE SHEET 1				–	52650	1002F

OPPOSITE ASSEMBLY | SHOWN ASSEMBLY | MATERIAL

REMOVE ALL BURRS AND SHARP CORNERS	DRAWN JAH	DATE 11/3/09	CHECKED CG	SNOW ENGINEERING CO. WICHITA FALLS, TEXAS
WELD	APPROVED	EFFECTIVITY 1002–0001	REVISED DATE 11/3/09	
FINISH NONE	TOLERANCES EXCEPT AS NOTED			TITLE PILOT INTERFACE GEN II FRDS
HEAT TREAT	ANGLES ± 1 1/2°	DRILLED HOLES		
ACT. WT. / CALC. WT.	FRACTIONS ± 1/16	.040 TO .1285 DIA. + .002 – .001		
	.00 ± .030	.136 TO .228 DIA. + .003 – .001		
	.000 ± .010	.234 TO .500 DIA. + .004 – .001		
	.0000 ± .001	.515 TO .750 DIA. + .005 – .001		

SCALE FULL | SIZE D | REV | DRAWING NUMBER 61587 SHEET 2